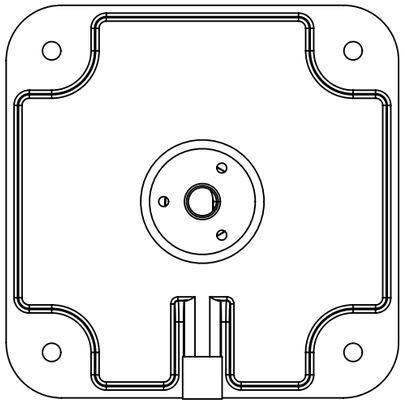

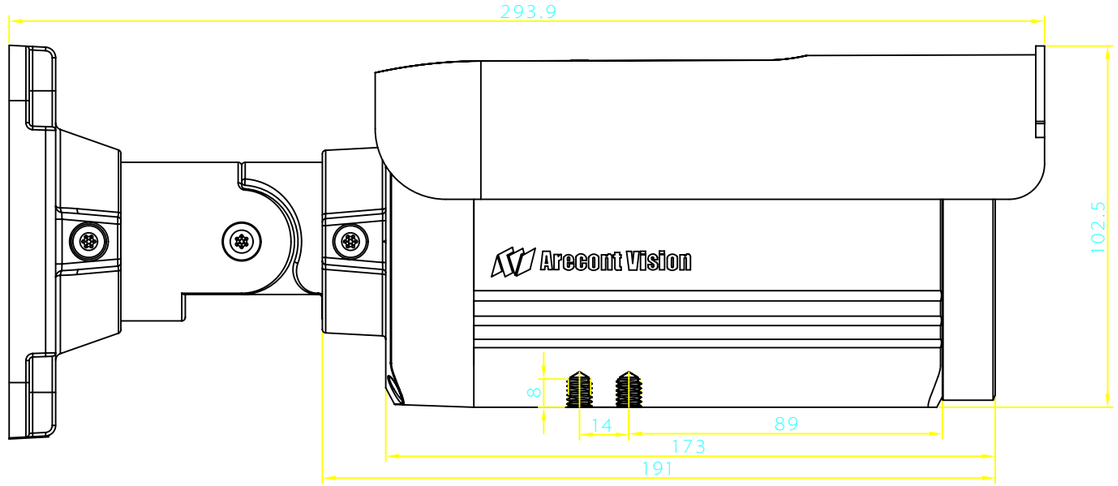
293.9
Arecont Vision
102.5
8
14
89
173
191

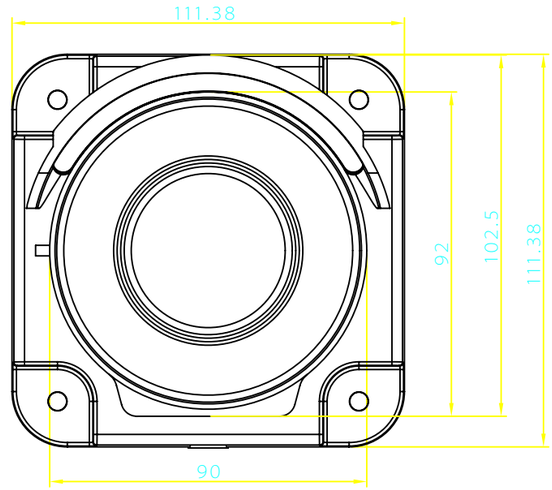
111.38
92
102.5
111.38
90

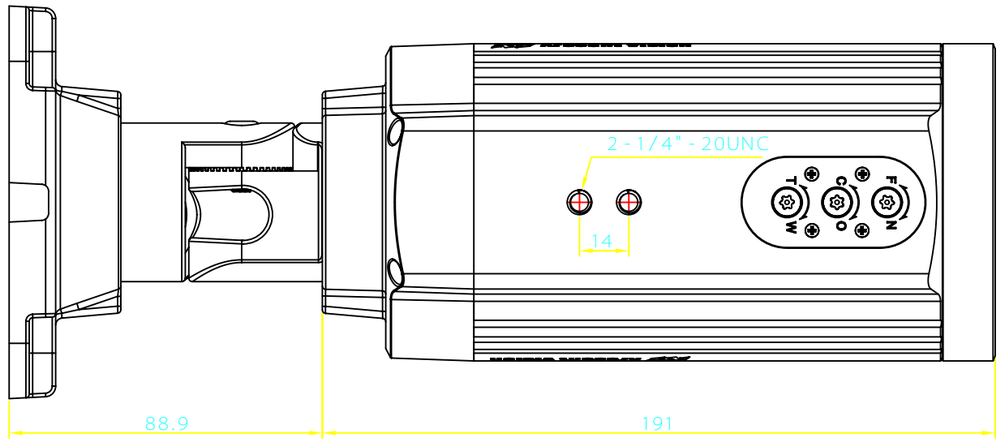
2-1/4"-20UNC
14
88.9
191